Lecture 9: Machine Translation and Advanced Recurrent LSTMs and GRUs

Notebook:	cs224N Natural Language Processing		
Created:	2019/6/6 16:55	**Updated:**	2019/6/6 22:03
Author:	wzy816@gmail.com		

Deep learning to the rescue! … ?

Maybe, we could translate directly with an RNN?

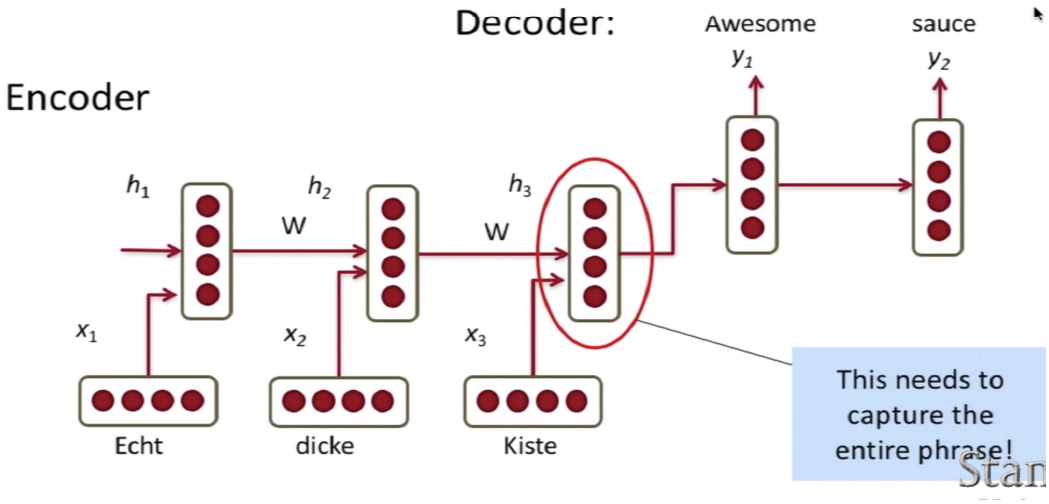

Decoder has a diff set of Weight

MT with RNNs – Simplest Model

Encoder: $h_t = \phi(h_{t-1}, x_t) = f\left(W^{(hh)}h_{t-1} + W^{(hx)}x_t\right)$

Decoder: $h_t = \phi(h_{t-1}) = f\left(W^{(hh)}h_{t-1}\right)$

$$y_t = softmax\left(W^{(S)}h_t\right)$$

Minimize cross entropy error for all target words conditioned on source words

$$\max_{\theta} \frac{1}{N} \sum_{n=1}^{N} \log p_\theta(y^{(n)}|x^{(n)})$$

Different picture, same idea

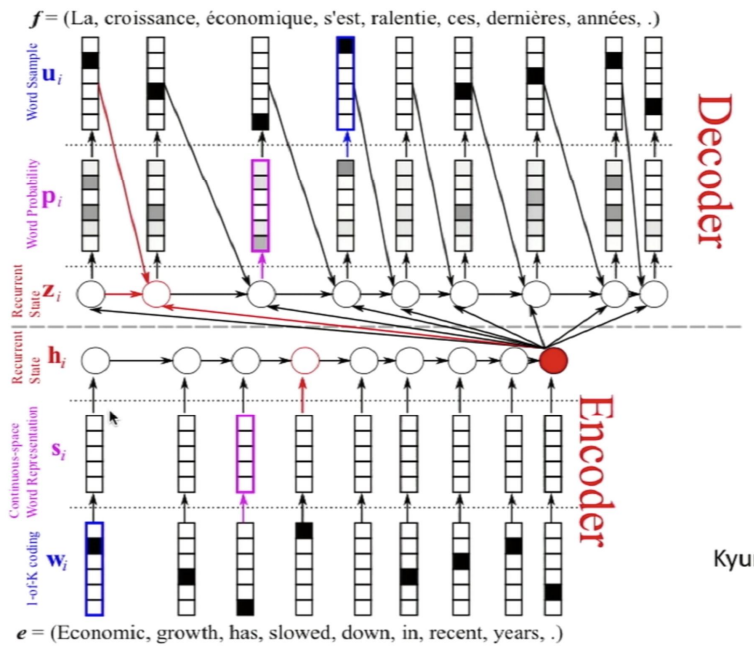

Kyunghyun Cho et al. 2014

Stan
Univ

GRU w/ two gates

GRUs

- Standard RNN computes hidden layer at next time step directly: $h_t = f\left(W^{(hh)}h_{t-1} + W^{(hx)}x_t\right)$
- GRU first computes an update **gate** (another layer) based on current input word vector and hidden state

$$z_t = \sigma\left(W^{(z)}x_t + U^{(z)}h_{t-1}\right)$$

- Compute reset gate similarly but with different weights

$$r_t = \sigma\left(W^{(r)}x_t + U^{(r)}h_{t-1}\right)$$

GRUs

- Update gate $z_t = \sigma\left(W^{(z)}x_t + U^{(z)}h_{t-1}\right)$
- Reset gate $r_t = \sigma\left(W^{(r)}x_t + U^{(r)}h_{t-1}\right)$
- New memory content: $\tilde{h}_t = \tanh\left(Wx_t + r_t \circ Uh_{t-1}\right)$
  If reset gate unit is ~0, then this ignores previous memory and only stores the new word information
- Final memory at time step combines current and previous time steps: $h_t = z_t \circ h_{t-1} + (1 - z_t) \circ \tilde{h}_t$

LSTM

Long-short-term-memories (LSTMs)

- We can make the units even more complex
- Allow each time step to modify
  - Input gate (current cell matters) $i_t = \sigma\left(W^{(i)}x_t + U^{(i)}h_{t-1}\right)$
  - Forget (gate 0, forget past) $f_t = \sigma\left(W^{(f)}x_t + U^{(f)}h_{t-1}\right)$
  - Output (how much cell is exposed) $o_t = \sigma\left(W^{(o)}x_t + U^{(o)}h_{t-1}\right)$
  - New memory cell $\tilde{c}_t = \tanh\left(W^{(c)}x_t + U^{(c)}h_{t-1}\right)$
- Final memory cell: $c_t = f_t \circ c_{t-1} + i_t \circ \tilde{c}_t$
- Final hidden state: $h_t = o_t \circ \tanh(c_t)$